Journal of Virology

Identification of C3b-binding regions on herpes simplex virus type 2 glycoprotein C.

C Seidel-Dugan, M Ponce de Leon, H M Friedman, R J Eisenberg and G H Cohen

***J. Virol.* 1990, 64(5):1897.**

Updated information and services can be found at:
http://jvi.asm.org/content/64/5/1897

These include:

CONTENT ALERTS

Receive: RSS Feeds, eTOCs, free email alerts (when new articles cite this article), more»

Information about commercial reprint orders: **http://journals.asm.org/site/misc/reprints.xhtml**
To subscribe to to another ASM Journal go to: **http://journals.asm.org/site/subscriptions/**

Journals.ASM.org

Downloaded from http://jvi.asm.org/ on June 3, 2014 by guest

JOURNAL OF VIROLOGY, May 1990, p. 1897–1906
0022-538X/90/051897-10$02.00/0
Copyright © 1990, American Society for Microbiology
Vol. 64, No. 5

Identification of C3b-Binding Regions on Herpes Simplex Virus Type 2 Glycoprotein C

CYNTHIA SEIDEL-DUGAN,[1,2,3]* MANUEL PONCE DE LEON,[1,2] HARVEY M. FRIEDMAN,[4] ROSELYN J. EISENBERG,[2,3] AND GARY H. COHEN[1,2]

Department of Microbiology[1] and Center for Oral Health Research,[2] School of Dental Medicine, Department of Pathobiology, School of Veterinary Medicine,[3] and Department of Medicine, School of Medicine,[4] University of Pennsylvania, Philadelphia, Pennsylvania 19104-6003

Received 5 September 1989/Accepted 9 January 1990

Glycoprotein C from herpes simplex viruses types 1 and 2 (gC-1 and gC-2) acts as a receptor for the C3b fragment of the third component of complement. Our goal is to identify domains on gC involved in C3b receptor activity. Here, we used in-frame linker-insertion mutagenesis of the cloned gene for gC-2 to identify regions of the protein involved in C3b binding. We constructed 41 mutants of gC-2, each having a single, double, or triple insertion of four amino acids at sites spread across the protein. A transient transfection assay was used to characterize the expressed mutant proteins. All of the proteins were expressed on the transfected cell surface, exhibited processing of N-linked oligosaccharides, and bound one or more monoclonal antibodies recognizing distinct antigenic sites on native gC-2. This suggested that each of the mutant proteins was folded into a native structure and that a loss of C3b binding by any of the mutants could be attributed to the disruption of a specific functional domain. When the panel of insertion mutants was assayed for C3b receptor activity, we identified three distinct regions that are important for C3b binding, since an insertion within those regions abolished C3b receptor activity. Region I was located between amino acids 102 and 107, region II was located between residues 222 and 279, and region III was located between residues 307 and 379. In addition, region III has some structural features similar to a conserved motif found in complement receptor 1, the human C3b receptor. Finally, blocking experiments indicated that gC-1 and gC-2 bind to similar locations on the C3b molecule.

Herpes simplex viruses (HSVs) encode at least seven distinct glycoproteins, which are found on the virion envelope as well as on the surface of infected cells (7, 41, 54, 59, 60). HSV glycoproteins act as major antigenic determinants for the cellular and humoral immune responses of the host (46, 48, 60). Three of these glycoproteins have functions that may modulate the immune response. Glycoprotein E (gE) and glycoprotein I (gI) function as a complex to bind the Fc portion of immunoglobulin G (4, 31, 32, 49). Glycoprotein C (gC) acts as a receptor for the C3b fragment of the third component of complement (18, 21, 45). Although gE, gI, and gC are not required for infection in cell culture (14, 26, 29, 33, 41, 42, 47, 65), gE and gC are present in clinical isolates (2, 22, 52), suggesting that Fc and C3b receptor activities are important for viral pathogenesis in vivo.

The C3b receptor is found on the surface of a variety of cell types after HSV type 1 (HSV-1) but not HSV type 2 (HSV-2) infection (5, 21, 39, 57, 58). Direct binding assays with purified gC-1 and C3b demonstrate that other viral and cellular proteins are not required for this interaction (18, 45). Although C3b receptor activity is not found on the surface of HSV-2-infected cells, purified gC-2 binds C3b in direct binding assays (18, 45), suggesting that gC-1 and gC-2 may be functionally as well as antigenically related (64, 66, 67). In addition, we recently showed that transfected mammalian cells that express gC-2 on their cell membranes also bind C3b (57). Thus, expression of other proteins during viral infection may prevent receptor activity on HSV-2-infected cells.

Since an understanding of C3b binding at the molecular level will be valuable in helping us to determine the functional significance of the HSV C3b receptor, one of our objectives is to characterize the structural basis for the interaction of gC and C3b. Previous attempts to identify sites on gC which bind C3b employed anti-gC-1 monoclonal antibodies (MAbs) to block receptor activity and gC-1 MAb-resistant mutants with single-amino-acid changes in each of the four antigenic sites of gC-1 (28, 44). Several of these mutants also failed to bind C3b, but no particular antigenic region of gC-1 was correlated with C3b binding (22). More recently, in-frame deletion mutants of gC-2 were used to identify C3b-binding sites on gC (57). One mutant protein, lacking gC-2 residues 26 through 73, binds C3b on transfected cell surfaces, suggesting that these residues are not involved in C3b receptor activity. Two other deletion mutants, lacking residues 219 through 244 or 318 through 346, do not bind C3b on the transfected cell surface. Several other characteristics of these mutants suggest that the latter two proteins do not fold into a functional receptor structure. Thus, although actual C3b contact residues could be missing in the two mutants, the effect of each deletion on conformation prevents a conclusion from being made.

In this paper, as an alternative approach for mapping C3b-binding domains, we used in-frame linker-insertion mutagenesis of gC-2. This type of mutagenesis is useful, since the insertion of a small number of amino acids will often abolish the function of one domain while having a minimal effect on adjacent domains of the protein (62). We constructed 41 linker-insertion mutants of gC-2, each having a single, double, or triple insertion of four amino acids at sites spread across the protein. Each mutant protein was expressed on the transfected cell surface and bound one or

* Corresponding author.

Downloaded from http://jvi.asm.org/ on June 3, 2014 by guest

more MAbs recognizing separate discontinuous epitopes. This suggested that each of the mutant proteins was folded into a "native" structure. We identified three distinct regions of gC-2 that are important for C3b binding. One of these regions, region III, has some structural features similar to a conserved motif found in CR1, the human C3b receptor, and other human C3-binding proteins (36, 53). Finally, blocking studies indicated that gC-1 and gC-2 bind to similar locations on C3b, suggesting that the two proteins may interact with C3b in a similar fashion.

MATERIALS AND METHODS

Construction of in-frame linker-insertion mutants. Restriction and other DNA-modifying enzymes were purchased from Bethesda Research Laboratories, Inc. (Gaithersburg, Md.), New England BioLabs, Inc. (Beverly, Mass.), or Boehringer Mannheim Biochemicals (Indianapolis, Ind.) and were used as directed by the manufacturer. Dodecameric *Bam*HI linkers (CGCGGATCCGCG) were purchased from New England BioLabs. Plasmid DNAs were propagated in *Escherichia coli* HB101 or DH5 supplied as competent cells by Bethesda Research Laboratories. Standard methods were used to prepare plasmid DNAs for linker-insertion mutagenesis and transfection (43).

The starting vector for linker-insertion mutagenesis was pCD64, a derivative of the gC-2 expression vector pCD45 (57). To construct pCD64, pCD45 DNA was digested with *Bam*HI, the protruding 5′ ends were treated with the Klenow fragment of *E. coli* DNA polymerase, and the ends were religated. This removed the recognition sequence for *Bam*HI from the vector while having no effect on the gC-2-coding region.

The linker-insertion mutagenesis protocol was based on a procedure described by R. Stenberg (personal communication). Briefly, pCD64 DNA was subjected to partial digestion with either *Hae*III or *Fnu*DII and separated on a 5% polyacrylamide gel, and the full-length linear forms were purified by electroelution. Phosphorylated *Bam*HI linkers were ligated to the blunt-ended fragments to restore the original reading frame of gC-2. The insertion of one linker results in the in-frame insertion of four amino acids. After digestion with *Bam*HI, the DNA was religated and used to transform *E. coli* strain HB101 or DH5. Several hundred colonies were evaluated for location of the inserted linker by restriction enzyme analysis. Each of the mutant plasmids was then sequenced across the region of the insert to confirm the exact position of the insert(s) and to be certain that there were no other changes in the region of the insertion (9, 56). When two or more linkers were inserted at a particular site, plasmid DNA was digested with *Bam*HI to remove the extra linkers, and the ends were religated.

Forty-one mutants were identified having in-frame insertions of one, two, or three linkers. Each plasmid was designated with a letter denoting the restriction enzyme used to generate the mutant (H, *Hae*III; F, *Fnu*DII) and a number according to the order in which it was isolated. The amino acid locations of these inserts are shown in Fig. 1 and Table 1. Plasmids containing a single insert that were derived from plasmids containing two or more inserts were designated by the original name followed by -1, i.e., H11-1.

DNA transfection. Transient transfection assays were performed as previously described (11, 57) by using NIH 3T3 cells and conditions optimized for gC expression. Cytoplasmic extracts (18) of the transfected cells were prepared, or the cells were harvested for immunofluorescence (57) at 42 h posttransfection.

TABLE 1. Summary of results from linker-insertion mutants

Plasmid[a]	Location[b]	No. of linkers[c]	Amino acids inserted[d]	Immunofluorescence results[e]				
				Cell surface[f]	C3b binding[g]	MAb binding[h]		
						MP-1	MP-5	104S
pCD64	WT	0		+	+	+	+	+
F89	40	1	ARIR	+	+	+	+	+
F90	47	1	ARIR	+	+	+	+	+
F59	50	1	RGSA	+	+	+	+	+
H99	72	1	ARIR	+	+	+	+	+
H61	102	1	ARIR	+	−	+	+	+
H29	102	2	ARIR	+	−	+	+	+
F115	107	1	RGSA	+	±	+	+	+
H41	152	1	ARIR	+	+	+	+	+
H52	152	2	ARIR	+	+	+	+	+
H35	156	1	ADPR	+	+	+	+	+
H11-1	179	1	ADPR	+	+	+	+	+
H11	179	3	ADPR	+	+	+	+	+
F118-1	184	1	RGSA	+	+	+	+	+
F118	184	2	RGSA	+	+	+	+	−
H110	216	1	ADPR	+	+	+	+	+
F101	222	1	ARIR	+	+	+	+	+
F96	222	3	ARIR	+	−	+	+	+
F99	231	1	ADPR	+	−	+	+	+
F83	243	1	ARIR	+	−	−	+	−
H95-1	256	1	ARIR	+	−	−	+	−
H95	256	2	ARIR	+	−	−	+	−
H76	280	1	ARIR	+	+	+	+	±
F48	302	1	ARIR	±	±	±	±	±
H70	303	1	ARIR	+	+	+	+	+
H1-1	307	1	ADPR	+	+	+	+	+
H1	307	2	ADPR	+	−	−	+	−
F109	322	1	ADPR	+	−	+	+	−
F69	322	2	ADPR	+	−	+	+	−
F38-1	340	1	RGSA	+	−	+	+	+
F38	340	2	RGSA	+	−	±	+	+
H20	341	1	RGSA	+	−	+	+	+
H58	356	1	ARIR	+	−	+	+	+
H17	380	1	ARIR	+	+	+	+	+
F11	382	1	ARIR	+	+	+	+	+
F75	382	2	ARIR	+	+	+	+	+
F110-1	433	1	RGSA	+	+	+	+	+
F110	433	2	RGSA	+	+	+	+	+
F13	456	1	ARIR	+	+	+	+	+
F35	456	2	ARIR	+	ND	+	+	+
H32	460	1	ARIR	±	ND	ND	ND	ND
H59	460	2	ARIR	±	ND	ND	ND	ND

[a] Name of the mutant.
[b] Amino acid residue number immediately preceding the insert.
[c] Number of linkers inserted.
[d] Amino acids inserted at each site (single-letter code).
[e] The immunofluorescence results are expressed as +, −, ±, or ND (not done). The ± designation was given to mutants exhibiting weak positive reactions that remained equivocal upon retesting.
[f] Cell surface expression measured by indirect immunofluorescence with polyclonal anti-gC-2 serum.
[g] C3b binding measured by indirect immunofluorescence.
[h] Reaction with MAb against gC-2 in the immunofluorescence assay.

Preparation of purified glycoproteins. gC-1, gC-2, and HSV-1 glycoprotein D (gD-1) were purified from cytoplasmic extracts of HSV-1 (NS)- or HSV-2 (333)-infected cells as described previously (18, 19).

Polyclonal antibodies and MAbs to gC. The preparation of rabbit polyclonal anti-gC-2 serum (R64) has been previously described (18). MAbs MP-1, MP-2, and MP-5 were prepared in our laboratory as described previously for anti-gD MAbs (17). The remaining MAbs used in this study were kindly provided by the following people: 104S, M. Zweig and S. Showalter (66); III-596, III-211, and III-188, P. Spear (50);

Downloaded from http://jvi.asm.org/ on June 3, 2014 by guest

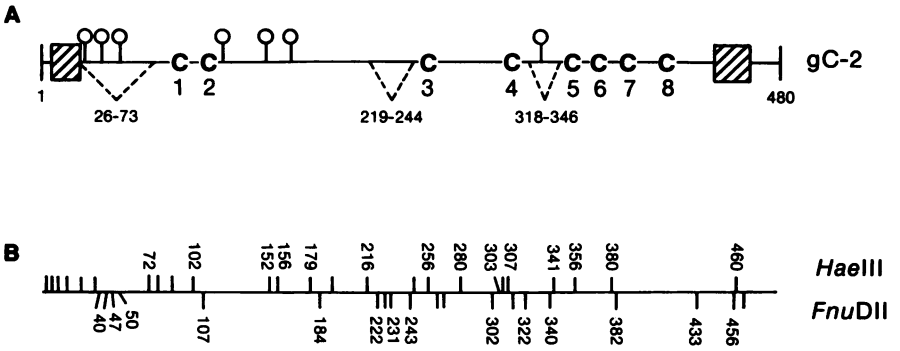

FIG. 1. Stick model of the coding region of the wild-type gC-2 gene contained in pCD64 and the location of the linker-insertion mutations. (A) gC-2 contains 480 amino acids with seven sites for the addition of N-linked oligosaccharides (○) and eight cysteine (C) residues. Hydrophobic sequences near the amino and carboxy termini (▨) are predicted to be the signal peptide and transmembrane anchor, respectively (13, 61). The locations of the three in-frame deletion mutants of gC-2 (57) are also shown. (B) The positions of the predicted *Hae*III and *Fnu*DII restriction sites contained in the gC-2 coding region are represented by vertical lines. For each mutant identified, the position of the *Bam*HI insert is indicated by the residue number of the amino acid immediately preceding the insertion (Table 1). No mutants were isolated at sites that are not numbered. Only mutants containing single inserts are shown here.

17α C1 and 17αA2, W. Rawls and D. Johnson (3); H1196-3 and H1265-3, L. Pereira; Fd8, S. Chatterjee (37). These MAbs were separated into groups that recognize different antigenic sites on gC-2 based on characteristics similar to those used to group MAbs to gD (10, 15–17, 30). First, MAbs were tested for reactivity with purified gC-1 or gC-2, or HSV-1- or HSV-2-infected cell extracts, on Western blots (immunoblots) under denaturing or nondenaturing conditions (10). Blocking studies were used to further separate the MAbs into groups (17, 30). Briefly, MAbs MP-1 and MP-5 were iodinated with Iodobeads (Pierce Chemical Co., Rockford, Ill.). Serial dilutions of purified gC-2 (90 to 1.2 ng) were spotted onto nitrocellulose strips; the strips were washed and incubated with excess unlabeled first antibody and then washed and treated with iodinated second antibody (MP-1 or MP-5, ca. 200,000 cpm). The spots were located by autoradiography and analyzed by densitometry or by counting in a gamma counter. The results were subjected to linear regression analysis, and the slope of the line was calculated. Percent blocking was calculated as described in footnote *a* of Table 2.

Immunofluorescence. To evaluate cell surface expression of gC-2, transfected cells (approximately 3×10^5 to 5×10^5 cells) were washed once with phosphate-buffered saline and then gently scraped into 2 ml of phosphate-buffered saline. The cells were pelleted and suspended in polyclonal anti-gC-2 serum (R64) at a 1:100 dilution. After incubation at 4°C for 1 h, 2 ml of phosphate-buffered saline was added, and the cells were pelleted and suspended in fluorescein-conjugated goat anti-rabbit immunoglobulin (Boehringer Mannheim) at a 1:100 dilution. After another wash, the cells were suspended in phosphate-buffered saline and viewed with a Leitz epifluorescence microscope.

To determine whether the mutant proteins were folding properly, the transfected cells were reacted with MAb MP-1, MP-5, or 104S (diluted 1:50), followed by a fluorescein-conjugated goat anti-mouse immunoglobulin (Boehringer Mannheim) (diluted 1:50) as described above. To detect C3b binding, the transfected cells were washed and reacted with 3.5 μg of purified human C3b (kindly provided by L. Fries and M. Frank) (18), followed by rhodamine-conjugated $F(ab')_2$ goat anti-human C3 (Organon Teknika, Malvern, Pa.) at a 1:40 dilution. In both cases, a sample of the transfected cells was also reacted with polyclonal anti-gC-2 serum and the goat anti-rabbit immunoglobulin G-fluorescein conjugate. If gC-2 was not easily detected on the surface of the transfected cell by binding of the polyclonal anti-gC-2 serum, the MAb- or C3b-binding results were not recorded and the assay was repeated with that particular mutant to achieve a strong level of fluorescence. This controlled for any variation in levels of expression in different transfections and ensured that the absence of C3b binding was not due to a lack of cell-surface expression of gC in that transfection.

Sodium dodecyl sulfate-polyacrylamide gel electrophoresis and Western blot analysis. Cytoplasmic extracts were evaluated by sodium dodecyl sulfate-polyacrylamide gel electrophoresis under denaturing or nondenaturing (native) conditions (10), followed by Western blot analysis (10, 11).

C3b blocking experiments between gC-1 and gC-2. C3b blocking studies were performed by using conditions similar to those described previously for MAb blocking studies (17, 30). Purified gC-1 was iodinated; serial dilutions of purified human C3b (340 to 85 ng) were spotted onto nitrocellulose strips; and the strips were washed and incubated with

TABLE 2. Blocking analysis with MAbs MP-1 and MP-5[a]

Blocking MAb (MAb 1)	% Blocking of iodinated antibody (MAb 2)		Reference or source
	MP-1	MP-5	
MP-1	97	0	57, this study
MP-2	91	8	This study
17αC1	100	0	3
17αA2	100	0	3
H1196-3	100	0	L. Pereira
H1265-3	44	0	L. Pereira
MP-5	0	78	57, this study
III-596	ND	82	50
104S	0	0	66
III-188	0	0	50
III-211	0	0	50

[a] In each assay, serial dilutions of purified gC-2 (90 to 1.2 ng) were spotted onto nitrocellulose strips, incubated with unlabeled antibody (MAb 1), and then reacted with iodinated antibody (MAb 2) (18, 30). The spots were located by autoradiography and analyzed by counting in a gamma counter or by densitometry. The results were subjected to linear regression analysis, and the slope of the line was calculated. The percent blocking was calculated as [1 − (counts per minute bound after incubation with MAb 1)/(counts per minute bound after incubation with control MAb 1C8)] × 100. MAb 1C8 recognizes a type-specific epitope on gC-1 (58). When MAb 104S was iodinated, it no longer reacted with gC-2. The remaining MAbs were not available in amounts sufficient for iodination.

Downloaded from http://jvi.asm.org/ on June 3, 2014 by guest

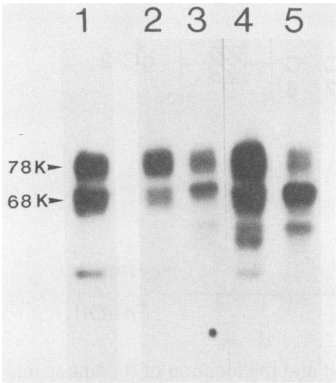

FIG. 2. Western blot analysis of wild-type and mutant gC-2 proteins synthesized in transfected NIH 3T3 cells. Cytoplasmic extracts from cells transfected with pCD64 (lane 1) or representative mutant plasmids (lanes 2 through 5) were electrophoresed under denaturing conditions, transferred to nitrocellulose, and reacted with polyclonal anti-gC serum, followed by iodinated protein A. This serum is type common (18) and reacts well with denatured gC-2. Lanes: 2, F101 (amino acid 222, one linker); 3, F96 (amino acid 222, three linkers); 4, F99 (amino acid 231); 5, F83 (amino acid 243). The remaining linker-insertion mutants produced proteins with mobilities similar to those shown here (data not shown).

unlabeled purified gC-1, gC-2, or gD-1 (20 μg/ml) and then washed and treated with the iodinated gC-1 (ca. 400,000 cpm). The spots were located by autoradiography and counted in a gamma counter.

RESULTS

Construction of in-frame linker-insertion mutants of gC-2. The expression vector used for construction of the linker-insertion mutants was pCD64. This vector contains the coding region of the gC-2 gene under the control of the Rous sarcoma virus long terminal repeat, and a simian virus 40 polyadenylation signal is located downstream of the gC-2 gene. Transient transfection with pCD64 DNA resulted in the synthesis of full-sized gC-2 (Fig. 2, lane 1) that was indistinguishable from gC-2 produced after transfection with pCD45 or after infection with HSV-2 (57).

Insertion mutants were derived by partial digestion of pCD64 DNA with either *Hae*III or *Fnu*DII followed by ligation to a dodecameric *Bam*HI linker. Forty-one insertion mutants were identified (Fig. 1, Table 1). Insertion of a single linker resulted in the in-frame insertion of 4 amino acids; several mutants contained two or three linkers, inserting 8 or 12 amino acids, respectively. Table 1 and Fig. 1 show the location and amino acid insert for each mutant.

Since C3b binding is dependent on the native conformation of gC-2 (18, 22), it was important to evaluate each of the insertion mutants for its ability to fold into a correct structure. Experiments described below address this issue.

Analysis of the insertion mutants by sodium dodecyl sulfate-polyacrylamide gel electrophoresis and Western blotting. Cytoplasmic extracts of cells transfected with each of the linker-insertion mutants were separated by sodium dodecyl sulfate-polyacrylamide gel electrophoresis, transferred to nitrocellulose, and reacted with a polyclonal anti-gC serum. Representative results for some of the mutants are shown in Fig. 2. Transfection with the wild-type gC-2 expression vector pCD64 resulted in the synthesis of two polypeptides with apparent molecular weights of 68,000 and 78,000 (Fig. 2, lane 1), representing different processed forms of gC-2 (57, 64). In previous experiments (57), we showed that the 78-kilodalton form is completely resistant to digestion with endoglycosidase H; the 68-kilodalton form is partially sensitive to this enzyme. Each of the linker-insertion mutants produced proteins with molecular weights similar to that of wild-type gC-2 (Fig. 2, lanes 2 through 5). Thus, insertion of 4, 8, or 12 amino acids did not have a noticeable effect on the electrophoretic migration of the expressed protein. Based on the presence of the 78-kilodalton form in Western blots, the mutants all exhibited some degree of processing to the product form of gC-2 containing complex N-linked oligosaccharides (57). Digestion of some of the mutant proteins with endoglycosidase H confirmed this conclusion (data not shown). There was, however, considerable variation in the amount of the 78-kilodalton form present. Several mutants also exhibited additional smaller bands (lanes 4 and 5). These smaller forms were also occasionally seen in extracts of wild-type gC-2 and might represent underglycosylated forms of gC-2 or proteolytic fragments of gC-2. When cytoplasmic extracts of the mutants were evaluated by Western blotting under nondenaturing native conditions, no high-molecular-weight aggregates were present (data not shown). Such aggregates and alterations in processing are commonly seen in extracts of proteins that have lost their native conformation (11, 57, 63). These results suggested that none of the mutant proteins was grossly malfolded.

Cell-surface expression of the gC-2 linker-insertion mutants. Each mutant was tested for gC-2 expression on the transfected cell surface by using polyclonal anti-gC-2 serum in a fluorescence assay (57). All of the insertion mutants were expressed on the surface of the transfected cells (Table 1). Since grossly malfolded proteins are often not transported to the cell surface (12, 25, 38), these results also suggested that the mutant proteins were folding properly. However, two deletion mutants of gC-2 are transported to the cell surface despite their apparent absence of native conformation (57). Therefore, we decided to use MAbs to confirm that the amino acid insertions did not have a dramatic effect on the folding of the mutant proteins (see next section).

Interestingly, four mutants (F13, F35, H32, and H59) with insertions of charged residues in the predicted transmembrane region (residues 443 through 469) were also found on the cell surface. Alterations to the transmembrane region of gC-1 results in a glycoprotein that is expressed on the cell surface and then slowly released into the medium (27). It is possible that these proteins with insertions in the transmembrane region are shed from the cell membrane more readily than wild-type gC-2; however, this question was not addressed.

Grouping of gC-2 MAbs. In addition to the above studies on the processing, aggregation, and transport of the mutant proteins, another approach for evaluating conformation is to determine the antigenic reactivity of each with MAbs that recognize distinct antigenic sites on the native molecule. We prepared MAbs against gC-2, gathered additional antibodies from other laboratories, and arranged them into groups that recognize distinct antigenic sites on gC-2 (10, 15–17, 30).

Reactivity with native or denatured gC-1 or gC-2 (results not shown) and previously published information about the MAbs (3, 37, 50, 66) were used to separate the panel of MAbs into groups that recognize type-common or type-specific and continuous or discontinuous epitopes on gC-2. Blocking experiments (17, 30) were then used to further divide the groups based on the ability of the test MAb to

Downloaded from http://jvi.asm.org/ on June 3, 2014 by guest

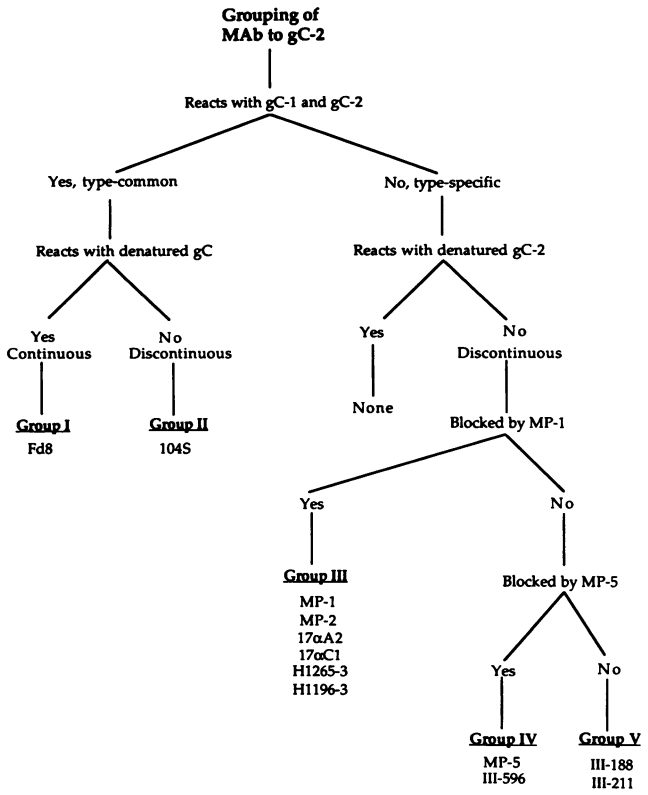

FIG. 3. Flow chart used to separate the anti-gC-2 MAbs into groups. Reactivity with native or denatured gC-2 on Western blots and previously published characteristics of some of the antibodies (3, 37, 50, 66) were used to determine whether the MAbs recognized type-common or type-specific or continuous or discontinuous epitopes. Blocking data are presented in Table 2. Each group presumably binds to a distinct antigenic site on gC-2. Group V, however, may include MAbs to more than one site.

block the binding of either iodinated MP-1 or MP-5 (Table 2). The overall grouping results are shown in Fig. 3.

The 12 MAbs were separated into five groups, each recognizing distinct antigenic sites on gC-2 (Fig. 3). Group I, which contained Fd8, recognized a type-common, continuous epitope, whereas group II (104S) recognized a type-common, discontinuous epitope. The remaining MAbs recognized type-specific, discontinuous epitopes and were further separated into three groups based on blocking experiments (Table 2, Fig. 3). As expected, MAb 104S (group II) did not block the binding of MP-1 or MP-5. Group III MAbs blocked the binding of iodinated MP-1 to gC-2 and had no effect on the binding of MP-5; group IV MAbs blocked the binding of iodinated MP-5 to gC-2 while having no effect on the binding of MP-1. A final group of antibodies, group V, did not block either MP-1 or MP-5. These MAbs may recognize the same or different antigenic sites and will require further characterization.

Reactivity of the gC-2 linker-insertion mutants with MAbs. Three MAbs, MP-1, MP-5, and 104S, were selected to test for reactivity with each of the linker-insertion mutants. These MAbs were selected since they recognize distinct antigenic sites on native gC-2 and do not react with denatured gC-2.

Transfected cells expressing either wild-type or mutant forms of gC-2 were assayed with MP-1, MP-5, and 104S for cell-surface immunofluorescence (Table 1). Most of the insertion mutants bound all three MAbs. Three mutants (F118, F109, and F69) bound two MAbs, and four mutants (F83, H95-1, H95, and H1) bound one MAb. The binding of at least one of the MAbs was taken as evidence that the particular mutant protein retained some native structure. In cases where a particular mutant bound one MAb but not another, we interpret this to mean that the insertion interrupted a particular portion of gC-2 needed for binding of the second MAb and that any effect on folding was probably limited to that specific region. This interpretation is also valid for the four mutants (F83, H95-1, H95, and H1) that only bound MP-5 and did not bind MP-1 or 104S. Although the loss of binding of more than one distinct antibody may indicate that more than a local disturbance occurred, the fact that at least one MAb did bind suggests there was not a global loss of conformation as seen previously with the gC-2 deletion mutants (57). It is also possible that even though blocking experiments placed MP-1 and 104S into two separate groups, the epitopes may be located near each other so that insertions at those sites specifically disturb residues necessary for formation of those epitopes. A similar situation has been observed with MAbs to gD (30). One of the mutants, F48, yielded inconsistent results with all antibodies tested, including polyclonal anti-gC serum. We do not know why results with this mutant were so variable; however, another mutant, H70, with an insertion only one amino acid downstream of F48 reacted with all of the antibodies.

We conclude that the native conformation of each of the mutant proteins (with the possible exception of F48) was not markedly affected by the presence of the linker.

Binding of C3b to the insertion mutants. The panel of linker-insertion mutants was tested for C3b receptor activity by indirect immunofluorescence (57). Having determined that each mutant is correctly folded, we could attribute the absence of C3b binding to disruption of a specific domain involved in that binding, rather than to a general disruption of protein conformation. Transfected cells were reacted with purified human C3b followed by a goat anti-human C3 rhodamine conjugate. Insertions upstream of residue 74 (F89, F90, F59, and H99) had no effect on C3b binding. This supports our previous finding that deletion of residues 26 through 73 of gC-2 had no effect on C3b receptor activity (57). With the remaining mutants, insertions in three different domains or regions of gC-2 prevented detectable binding of C3b to the transfected cells.

Region I is located within residues 102 through 107 (mutants H61, H29, and F115; Table 1 and Fig. 4A). Although insertions at residue 102 clearly abolished C3b receptor activity, results with mutant F115 (residue 107) were more ambiguous, possibly due to low expression of the mutant protein on the cell surface. However, due to its proximity to residue 102, and the fact that there is a large gap before the next insertion at residue 152, we have included residue 107 in Region I. A more complete evaluation of this region will be necessary to precisely define its boundaries.

Region II is located between residues 222 and 279 (mutants F96, F99, F83, H95-1, and H95; Table 1 and Fig. 4B). Interestingly, an insertion of 4 amino acids at residue 222 had no detectable effect on C3 binding, but the insertion of 12 amino acids at the same site abolished C3b receptor activity, as did single or double insertions at several positions downstream of residue 222. Insertions at residue 216 had no effect on C3b binding. This suggests that residue 222 may be located on the edge of region II, so that a small insertion has no effect, but larger insertions are disruptive to the domain. Since an insertion at residue 256 abolished C3b binding but

Downloaded from http://jvi.asm.org/ on June 3, 2014 by guest

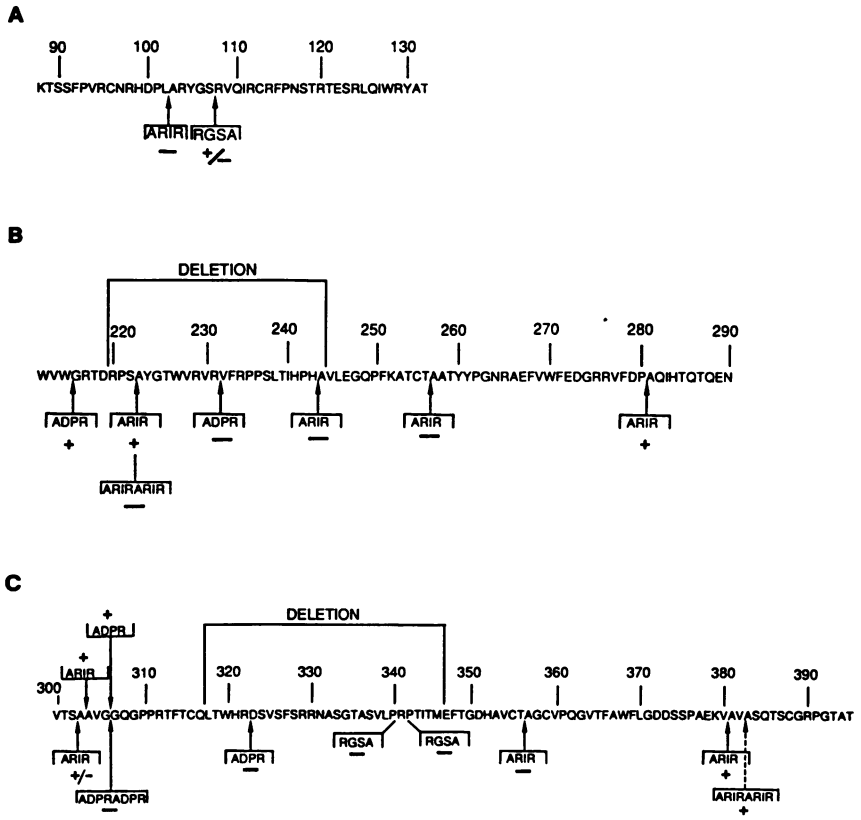

FIG. 4. Amino acid sequence of regions I (A), II (B), and III (C) of gC-2. The locations and amino acid compositions of the insertions within each region are shown either above or below the wild-type sequence. The symbols +, −, or +/− refer to C3b-binding activity of the indicated mutant (Table 1). The bracketed areas in panels B and C refer to the amino acids removed from gC-2 in a previous study (57).

an insertion at 280 had no effect, the carboxy-terminal end of region II was defined as residue 279.

Region III encompasses residues 307 to 379 (mutants H1, F109, F69, F38-1, F38, H20, and H58; Table 1 and Fig. 4C) by using the same criteria used to delineate Region II. Again, amino acid 307 appeared to identify the edge of this region, since the presence of one linker at this site had no effect on C3b binding but insertion of two linkers abolished C3b binding. Once again, F48 gave inconsistent results in the C3b binding assay. However, this mutant also gave inconsistent results for expression on the cell surface and reaction with the MAbs. An insertion one amino acid downstream (H70) gave a wild-type reaction with both MAbs and with C3b.

C3b blocking experiments. We were interested in determining whether gC-1 and gC-2 bind to similar locations on C3b. Previous work using in vitro assays suggested that purified gC-1 and gC-2 have different effects on the complement cascade (18, 23). It is possible that these differing effects are mediated by binding of gC-1 and gC-2 to different domains on C3b. We used a blocking experiment to determine whether the binding of gC-2 would block the binding of iodinated gC-1 to purified C3b (Fig. 5). When gC-1 or gC-2 was used as the blocking agent, the binding of the iodinated gC-1 probe was reduced by 70 to 80%. The results suggest that gC-1 and gC-2 bind to a similar location on C3b, since binding of either could block the binding of gC-1 to C3b.

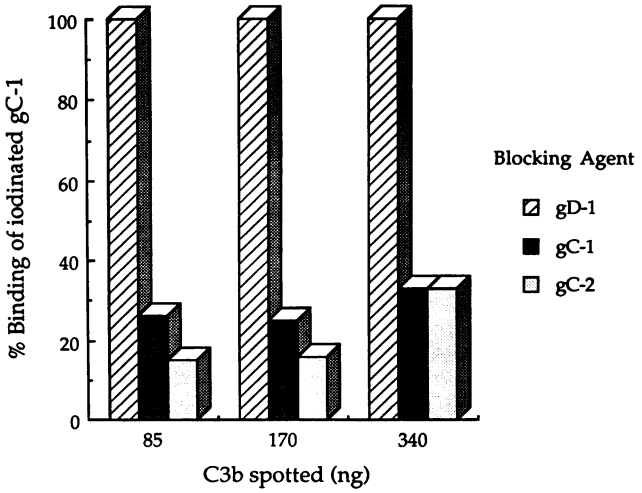

FIG. 5. Binding of iodinated gC-1 to C3b in the presence of unlabeled gC-1, gC-2, or gD-1. Purified human C3b (85, 170, or 340 ng) was spotted onto nitrocellulose, and the strips were washed and incubated with 20 μg of unlabeled purified gC-1 or gC-2. The strips were washed, incubated with iodinated gC-1, and subjected to autoradiography. The spots were located, cut from the nitrocellulose, and counted in a gamma counter. The maximal level of binding (100%) was determined from a control in which the strip was incubated with 20 μg of unlabeled gD-1 as the blocking agent. These results represent the averages of two experiments. At higher concentrations of C3b (greater than 340 ng), binding of labeled gC-1 could not be blocked by 20 μg of unlabeled gC-1 or gC-2 (data not shown).

DISCUSSION

Identification of C3b-binding domains on gC. gC from HSV has been shown to act as a receptor for the C3b fragment of

Downloaded from http://jvi.asm.org/ on June 3, 2014 by guest

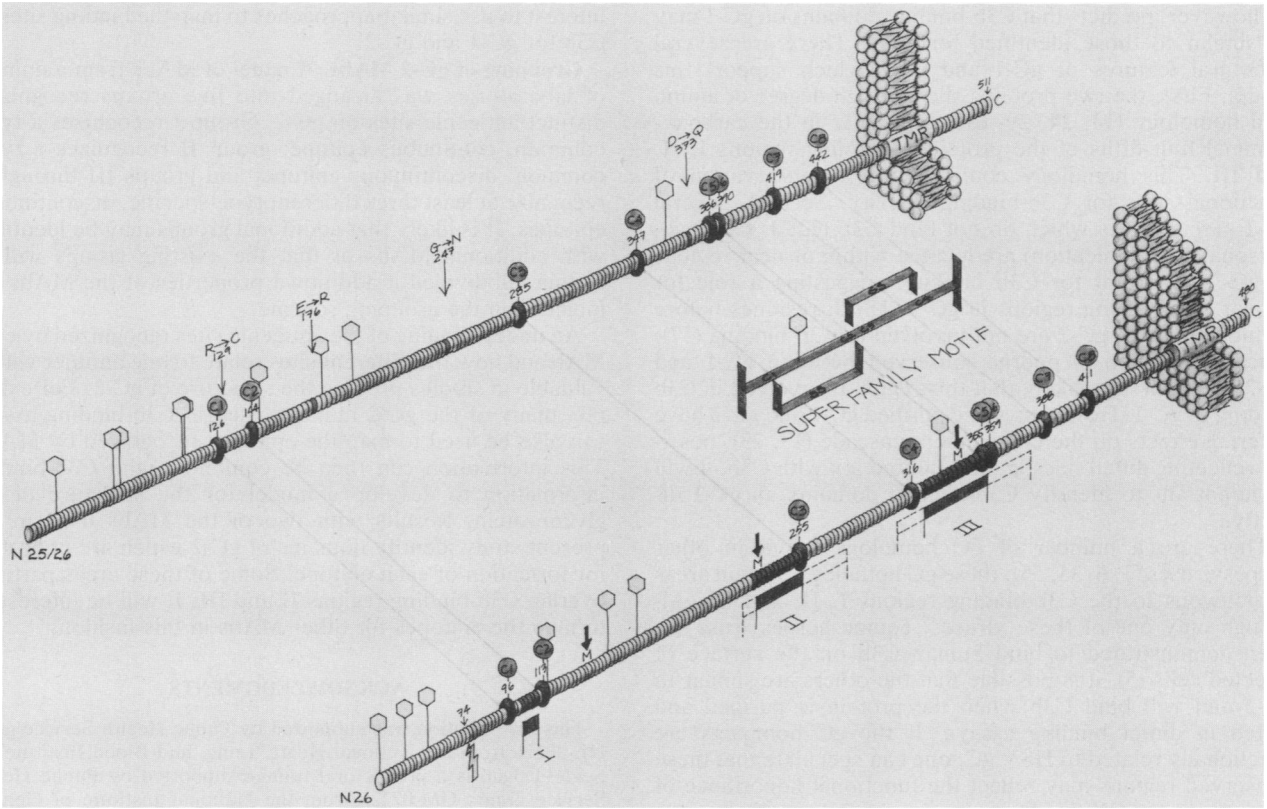

FIG. 6. Model of gC-1 (top) and gC-2 (bottom). For gC-1, N-terminal sequencing has shown that the mature protein begins with either residue 25 (our unpublished results) or 26 (34); the N terminus of gC-2 is blocked (our unpublished results), possibly due to the presence of an N-linked oligosaccharide at residue 26 immediately after the predicted signal sequence (13, 61). Cysteine residues are marked with a C (C1 through C8). The parallel lines drawn from C1 of gC-1 to C1 of gC-2, etc., emphasize the structural similarities of the two proteins. N-linked oligosaccharides are shown as hexagonal balloons. Methionine residues in gC-2 are shown with bold arrows. The regions involved in gC-2 binding to C3b are region I (residues 102 through 107), region II (residues 222 through 279), and region III (residues 307 through 379). The bars are derived from C3b-negative mutants; the dotted lines extend the region to the next positive mutant. The lightning bolt below residue 74 of gC-2 indicates that upstream sequences are not involved in C3b binding (57). Amino acid changes in *mar* mutants of gC-1, which do not bind C3b, are shown by single-letter code (22; J. Glorioso, personal communication). The conserved motif of the CR1 superfamily is aligned so that cysteine 1 of the motif corresponds to cysteine 4 of gC, etc.

the third component of complement (18, 21, 45). One of the goals of our laboratory is to determine the structural basis for this interaction. We chose to use linker-insertion mutagenesis to map C3b-binding sites on gC. This approach, which relies on the creation of a large panel of mutants spread across a gene, has been successfully used to identify functional domains of a number of other HSV proteins (8, 20, 51). In addition, the insertion of a small number of amino acids has been shown to abolish the activity of one domain, while having a minimal effect on adjacent domains (62). This was of special interest, since the interaction between gC and C3b is dependent on the proper tertiary structure of gC (18, 22). We created a panel of 41 mutants that identified three distinct regions of gC-2 important for C3b binding. Region I is located between amino acids 102 and 107, region II is between amino acids 222 and 279, and region III is between amino acids 307 and 379 (Fig. 6).

All of the mutants were expressed on the transfected cell surface, produced proteins with similar electrophoretic mobility to wild-type gC-2, and bound one or more MAbs that recognize distinct discontinuous epitopes on gC-2. These results suggest that each of the mutant proteins folds into a native structure, and that loss of C3b binding is attributable to local disruption of a specific functional domain. Of the three possible amino acid sequences contained in the linker, all three were represented in mutants that no longer bound C3b. Thus, although it is possible that a particular amino acid sequence might be more disruptive at one site than at another, there was no relationship between the sequence of the insert and the ability of the mutant to bind C3b. In addition, the fact that insertions that abolish C3b binding are contiguous within the three regions of gC-2 rather than randomly distributed throughout the protein is further evidence that specific C3b-binding domains have been identified. Since there are several gaps not covered by the insertion mutant panel, it is possible that additional regions of gC-2 may also be involved in C3b binding. Further mutagenesis will be necessary to fill in these gaps and to precisely define the boundaries of regions I, II, and III.

The fact that three separate regions on gC-2 were identified as being important for C3b binding and the sensitivity of C3b binding to denaturation of gC-2 suggest that the sequences that interact directly with C3b are dependent on tertiary structure for proper alignment. However, it is not clear whether the three regions of gC-2 come together to form one C3b-binding site or whether gC binds C3b at three or more distinct sites.

Originally, we focused on gC-2 rather than gC-1 for mutagenesis, since there is a higher level of expression of gC-2 in our transfection system (57). Our current model (Fig.

Downloaded from http://jvi.asm.org/ on June 3, 2014 by guest

6), however, predicts that C3b-binding domains on gC-1 may be similar to those identified for gC-2. There are several structural features of gC-1 and gC-2 which support this model. First, the two proteins show a high degree of amino acid homology (13, 24, 29, 61), especially in the carboxy-terminal four-fifths of the protein containing regions I, II, and III. This homology could reflect a conservation of functional sites for C3b-binding activity. Second, several gC-1 *mar* mutants which do not bind C3b (22; J. Glorioso, personal communication) are located within or near regions of gC-2 important for C3b binding, suggesting a role for similar C3b-binding regions in gC-1. Third, residues before amino acid 74 of gC-2 are not involved in C3b binding (57). Since this region is poorly conserved between gC-1 and gC-2, we think it unlikely that this region is involved in C3b binding to gC-1. However, since purified gC-1 and gC-2 have differing effects on the complement cascade (18, 23), possibly reflecting differences in their interaction with C3b, it will be important to identify C3b-binding domains on gC-1 directly.

There are a number of gC homologs found in other herpesviruses (1, 6, 35, 55); these gC homologs contain areas homologous to the C3b-binding regions I, II, and III. Although only one of these viruses, equine herpesvirus, has been demonstrated to bind human C3b on the surface of infected cells (5), it is possible that the others are similar to gC-2 and will bind C3b when the protein is purified and tested in direct binding assays. If the gC homologs are functionally related to HSV gC, one can speculate that these conserved regions may reflect the functional importance of these areas for C3b binding.

It is interesting that region III is located in an area of gC that has some structural features similar to those found in CR1 and CR2, the human C3b and C3dg receptors, respectively. These receptors are members of a superfamily of proteins, many of which directly interact with C3 fragments. Members of this protein family contain a repeating unit of about 60 amino acids with a similar motif of conserved residues (36, 53). This motif has a framework consisting of four cysteine residues, conserved tryptophan and glycine residues, and a site for N-linked glycosylation. A similar motif is found in gC-1 and gC-2 between cysteines 4 and 7 of the amino acid sequence (Fig. 4C and 6). Although it is not clear what role this conserved motif plays in the interaction of CR1 with C3b, it will be interesting to target this region of gC for site-directed mutagenesis to determine whether any of these conserved features is important for C3b binding to gC.

gC-1 and gC-2 bind to similar locations on C3b. It has been postulated that the HSV C3b receptor is important in modulating the immune response of the host to HSV infection, possibly by modulating the effects of the complement cascade and protecting the virus or virus-infected cell from complement-mediated damage (45; S. Harris, unpublished observations). In in vitro assays, however, purified gC-1 and gC-2 differ in their effects on the alternative pathway C3 convertase and in their ability to reduce the efficiency of complement-mediated lysis (18, 23). We used a blocking experiment to determine whether this difference in activity might be explained by the binding of gC-1 and gC-2 to different functional domains on C3b. Our results indicated that gC-1 and gC-2 blocked the binding of iodinated gC-1 to C3b equally well, suggesting that both proteins bind to a similar site on C3b. The binding sites on C3b for a number of complement components and complement control proteins have been identified by using anti-C3 MAbs and peptides from different regions of C3b (40). It would be of great interest to use similar approaches to map the binding sites on C3b for gC-1 and gC-2.

Grouping of gC-2 MAbs. A panel of MAbs from a number of laboratories was arranged into five groups recognizing distinct antigenic sites on gC-2. Group I recognizes a type-common, continuous epitope; group II recognizes a type-common, discontinuous epitope; and groups III through V recognize at least three different type-specific, discontinuous epitopes. It is likely that additional groups may be identified with additional MAbs or that the existing groups will be further subdivided if additional properties of the MAbs are included in the grouping scheme.

An understanding of the antigenic sites recognized by each MAb and how the different sites relate to one another will be valuable in studies probing the structure of gC-2. For example, many of the gC-2 mutants used in C3b-binding assays can also be used to map the epitopes recognized by MAbs. This information can then be combined with C3b-binding information to develop a model for the structure of the glycoprotein. Results with two of the MAbs used in the present study identify domains of gC-2 which are important for formation of each epitope. Some of these areas partially overlap C3b-binding regions II and III. It will be interesting to map the epitopes for other MAbs in this fashion.

ACKNOWLEDGMENTS

This investigation was supported by Public Health Service grant HL-28220 from the National Heart, Lung, and Blood Institute. C. Seidel-Dugan is a predoctoral trainee supported by Public Health Service grants GM-07225 from the National Institute of General Medical Sciences and AI-07325 from the National Institute of Allergy and Infectious Diseases.

We thank R. Stenberg for invaluable advice with the linker-insertion mutagenesis; L. Fries and M. Frank for the purified human C3b; S. Roberts and M. Muggeridge for help in preparing the figures; and M. Cohen, R. A. Eisenberg, and T. Tucker for excellent technical assistance.

LITERATURE CITED

1. **Allen, G. P., and L. D. Coogle.** 1988. Characterization of an equine herpesvirus type 1 gene encoding a glycoprotein (gp13) with homology to herpes simplex virus glycoprotein C. J. Virol. **62:**2850–2858.
2. **Arvin, A. M., C. M. Koropchak, A. S. Yeager, and L. Pereira.** 1983. Detection of type-specific antibody to herpes simplex virus type 1 by radioimmunoassay with herpes simplex virus type 1 glycoprotein C purified with monoclonal antibody. Infect. Immun. **40:**184–189.
3. **Balachandron, N., D. Harnish, W. E. Rawls, and S. Bacchetti.** 1982. Glycoproteins of herpes simplex virus type 2 as defined by monoclonal antibodies. J. Virol. **44:**344–355.
4. **Baucke, R. B., and P. G. Spear.** 1979. Membrane proteins specified by herpes simplex viruses. V. Identification of an Fc-binding glycoprotein. J. Virol. **32:**779–789.
5. **Bielefeldt Ohmann, H., and L. A. Babiuk.** 1988. Induction of receptors for complement and immunoglobulins by herpesviruses of various species. Virus Res. **9:**335–342.
6. **Binns, M. M., and N. L. J. Ross.** 1989. Nucleotide sequence of the Marek's disease virus (MDV) RB-1B A antigen gene and the identification of the MDV A antigen as the herpes simplex virus-1 glycoprotein C homolog. Virus Res. **12:**371–382.
7. **Buckmaster, E. A., U. Gompels, and A. Minson.** 1984. Characterization and physical mapping of an HSV-1 glycoprotein of approximately 115 × 10^3 molecular weight. Virology **139:**408–413.
8. **Cai, W., S. Person, C. DebRoy, and B. Gu.** 1988. Functional regions and structural features of the gB glycoprotein of herpes simplex virus type 1. An analysis of linker insertion mutants. J. Mol. Biol. **201:**575–588.

Downloaded from http://jvi.asm.org/ on June 3, 2014 by guest

9. **Chen, E. U., and P. H. Seeburg.** 1985. Supercoil sequencing: a fast and simple method for sequencing plasmid DNA. DNA **4**:165–170.
10. **Cohen, G. H., V. J. Isola, J. Kuhns, P. W. Berman, and R. J. Eisenberg.** 1986. Localization of discontinuous epitopes of herpes simplex virus glycoprotein D: use of a nondenaturing ("native" gel) system of polyacrylamide gel electrophoresis coupled with Western blotting. J. Virol. **60**:157–166.
11. **Cohen, G. H., W. C. Wilcox, D. L. Sodora, D. Long, J. Z. Levin, and R. J. Eisenberg.** 1988. Expression of herpes simplex virus type 1 glycoprotein D deletion mutants in mammalian cells. J. Virol. **62**:1932–1940.
12. **Doms, R. W., A. Ruusala, C. Machamer, J. Helenius, A. Helenius, and J. K. Rose.** 1988. Differential effects of mutations in three domains on folding, quaternary structure, and intracellular transport of vesicular stomatitis virus G protein. J. Cell Biol. **107**:89–99.
13. **Dowbenco, D. J., and L. A. Laskey.** 1984. Extensive homology between the herpes simplex virus type 2 glycoprotein F gene and the herpes simplex virus type 1 glycoprotein C gene. J. Virol. **52**:154–163.
14. **Draper, K. G., R. H. Costa, G. T.-Y. Lee, P. G. Spear, and E. K. Wagner.** 1984. Molecular basis of the glycoprotein-C-negative phenotype of herpes simplex virus type 1 macroplaque strain. J. Virol. **51**:578–585.
15. **Eisenberg, R. J., and G. H. Cohen.** 1986. Identification and analysis of biologically active sites of herpes simplex virus glycoprotein D, p. 74–84. *In* R. L. Crowell and K. Lonberg-Holm (ed.), Virus attachment and entry into cells. American Society for Microbiology, Washington, D.C.
16. **Eisenberg, R. J., D. Long, L. Pereira, B. Hampar, M. Zweig, and G. H. Cohen.** 1982. Effect of monoclonal antibodies on limited proteolysis of native glycoprotein D of herpes simplex virus type 1. J. Virol. **41**:478–488.
17. **Eisenberg, R. J., D. Long, M. Ponce de Leon, J. T. Mathews, P. G. Spear, M. G. Gibson, L. A. Laskey, P. Berman, E. Golub, and G. H. Cohen.** 1985. Localization of epitopes of herpes simplex virus type 1 glycoprotein D. J. Virol. **53**:634–644.
18. **Eisenberg, R. J., M. Ponce de Leon, H. M. Friedman, L. F. Fries, M. M. Frank, J. C. Hastings, and G. H. Cohen.** 1987. Complement component C3b binds directly to purified glycoprotein C of herpes simplex virus types 1 and 2. Microb. Pathogen. **3**:423–435.
19. **Eisenberg, R. J., M. Ponce de Leon, L. Pereira, D. Long, and G. H. Cohen.** 1982. Purification of glycoprotein D of herpes simplex virus types 1 and 2 by use of monoclonal antibody. J. Virol. **41**:1099–1104.
20. **Everett, R. D.** 1987. A detailed mutational analysis of Vmw110, a trans-acting transcriptional activator encoded by herpes simplex virus type 1. EMBO J. **6**:2069–2076.
21. **Friedman, H. M., G. H. Cohen, R. J. Eisenberg, C. A. Seidel, and D. B. Cines.** 1984. Glycoprotein C of HSV-1 functions as a C3b receptor on infected endothelial cells. Nature (London) **309**:633–635.
22. **Friedman, H. M., J. C. Glorioso, G. H. Cohen, J. C. Hastings, S. L. Harris, and R. J. Eisenberg.** 1986. Binding of complement component C3b to glycoprotein C of herpes simplex virus type 1: mapping of gC-binding sites and demonstration of conserved C3b binding in low-passage clinical isolates. J. Virol. **60**:470–475.
23. **Fries, L. F., H. M. Friedman, G. H. Cohen, R. J. Eisenberg, C. H. Hammer, and M. M. Frank.** 1986. Glycoprotein C of herpes simplex virus type 1 is an inhibitor of the complement cascade. J. Immunol. **137**:1636–1641.
24. **Frink, R. J., R. Eisenberg, G. Cohen, and E. K. Wagner.** 1983. Detailed analysis of the portion of the herpes simplex virus type 1 genome encoding glycoprotein C. J. Virol. **45**:634–647.
25. **Gething, M.-J., K. McCammon, and J. Sambrook.** 1986. Expression of wild-type and mutant forms of influenza hemagglutinin: the role of folding in intracellular transport. Cell **46**:939–950.
26. **Holland, T. C., F. L. Homa, D. S. Marlin, M. Levine, and J. Glorioso.** 1984. Herpes simplex virus type 1 glycoprotein C-negative mutants exhibit multiple phenotypes, including secretion of truncated glycoproteins. J. Virol. **52**:566–574.
27. **Holland, T. C., R. J. Lerch, and K. Earhart.** 1988. The cytoplasmic domain of herpes simplex virus type 1 glycoprotein C is required for membrane anchoring. J. Virol. **62**:1753–1761.
28. **Holland, T. C., S. D. Marlin, M. Levine, and J. Glorioso.** 1983. Antigenic variants of herpes simplex virus selected with glycoprotein-specific monoclonal antibodies. J. Virol. **45**:672–682.
29. **Homa, F. L., D. J. M. Purifoy, J. C. Glorioso, and M. Levine.** 1986. Molecular basis of the glycoprotein C-negative phenotypes of herpes simplex virus type 1 mutants selected with a virus-neutralizing monoclonal antibody. J. Virol. **58**:281–289.
30. **Isola, V. J., R. J. Eisenberg, G. R. Siebert, C. J. Heilman, W. C. Wilcox, and G. H. Cohen.** 1989. Fine mapping of antigenic site II of herpes simplex virus glycoprotein D. J. Virol. **63**:2325–2334.
31. **Johnson, D. C., and V. Feenstra.** 1987. Identification of a novel herpes simplex virus type 1-induced glycoprotein which complexes with gE and binds immunoglobulin. J. Virol. **61**:2208–2216.
32. **Johnson, D. C., M. C. Frame, M. W. Ligas, A. M. Cross, and N. D. Stow.** 1988. Herpes simplex virus immunoglobulin G Fc receptor activity depends on a complex of two viral glycoproteins, gE and gI. J. Virol. **62**:1347–1354.
33. **Johnson, D. C., M. R. McDermott, C. Chrisp, and J. C. Glorioso.** 1986. Pathogenicity in mice of herpes simplex type 2 mutants unable to express glycoprotein C. J. Virol. **58**:36–42.
34. **Kikuchi, G. E., J. E. Coligan, T. C. Holland, M. Levine, J. C. Glorioso, and R. Nairn.** 1984. Biochemical characterization of peptides from herpes simplex virus glycoprotein gC: loss of CNBr fragments from the carboxy terminus of truncated, secreted gC molecules. J. Virol. **52**:806–815.
35. **Kinchington, P. R., J. Remenick, J. M. Ostrove, S. E. Strauss, W. T. Ruyechan, and J. Hay.** 1986. Putative glycoprotein gene of varicella-zoster virus with variable copy numbers of a 42-base-pair repeat sequence has homology to herpes simplex virus glycoprotein C. J. Virol. **59**:660–668.
36. **Klickstein, L. B., W. W. Wong, J. A. Smith, J. H. Weis, J. G. Wilson, and D. T. Fearon.** 1987. Human C3b/C4b receptor (CR1). Demonstration of long homologous repeating domains that are composed of the short consensus repeats characteristic of C3/C4 binding proteins. J. Exp. Med. **165**:1095–1112.
37. **Koga, J., S. Chatterjee, and R. J. Whitley.** 1986. Studies on herpes simplex virus type 1 glycoproteins using monoclonal antibodies. Virology **151**:385–389.
38. **Kreis, T. E., and H. F. Lodish.** 1986. Oligomerization is essential for transport of vesicular stomatitis viral glycoprotein to the cell surface. Cell **46**:929–937.
39. **Kubota, Y., T. A. Gaither, J. Cason, J. J. O'Shea, and T. J. Lawley.** 1987. Characterization of the C3 receptor induced by herpes simplex virus type 1 infection of human epidermal, endothelial, and A431 cells. J. Immunol. **138**:1137–1142.
40. **Lambris, J. D.** 1988. The multifunctional role of C3, the third component of complement. Immunol. Today **9**:387–393.
41. **Longnecker, R., S. Chatterjee, R. J. Whitley, and B. Roizman.** 1987. Identification of a herpes simplex virus 1 glycoprotein gene within a gene cluster dispensible for growth in cell culture. Proc. Natl. Acad. Sci. USA **84**:4303–4307.
42. **Longnecker, R., and B. Roizman.** 1986. Generation of an inverting herpes simplex virus 1 mutant lacking the L-S junction a sequences, an origin of DNA synthesis, and several genes, including those specifying glycoprotein E and the α47 gene. J. Virol. **58**:583–591.
43. **Maniatis, T., E. F. Fritsch, and J. Sambrook.** 1982. Molecular cloning: a laboratory manual. Cold Spring Harbor Laboratory, Cold Spring Harbor, N.Y.
44. **Marlin, S. D., T. C. Holland, M. Levine, and J. C. Glorioso.** 1985. Epitopes of herpes simplex virus type 1 glycoprotein gC are clustered in two antigenic sites. J. Virol. **53**:128–136.
45. **McNearney, T. A., C. Odell, V. M. Holers, P. G. Spear, and J. P. Atkinson.** 1987. Herpes simplex virus glycoproteins gC-1 and gC-2 bind to the third component of complement and provide protection against complement-mediated neutralization of viral infectivity. J. Exp. Med. **166**:1525–1535.
46. **Nahmias, A. J., J. Dannenbarger, C. Wickliffe, and J. Muther.**

Downloaded from http://jvi.asm.org/ on June 3, 2014 by guest

1980. Clinical aspects of infection with herpes simplex viruses 1 and 2, p. 2–9. *In* A. J. Nahmias, W. R. Dowdle, and R. F. Schinazi (ed.), The human herpes viruses, an interdisciplinary perspective. Elsevier/North-Holland Publishing Co., New York.

47. **Neidhardt, H., C. H. Schroder, and H. C. Kaerner.** 1987. Herpes simplex virus type 1 glycoprotein E is not indispensible for viral infectivity. J. Virol. **61:**600–603.
48. **Norrild, B.** 1985. Humoral response to herpes simplex virus infections, p. 69–86. *In* B. Roizman and C. Lopez (ed.), The herpesviruses, vol. 4. Plenum Publishing Corp., New York.
49. **Para, M. F., R. B. Baucke, and P. G. Spear.** 1980. Immunoglobulin G (Fc)-binding receptors on virions of herpes simplex virus type 1 and transfer of these receptors to the cell surface by infection. J. Virol. **34:**512–520.
50. **Para, M. F., M. L. Parish, A. G. Noble, and P. G. Spear.** 1985. Potent neutralizing activity associated with anti-glycoprotein D specificity among monoclonal antibodies selected for binding to herpes simplex virions. J. Virol. **55:**483–488.
51. **Paterson, T., and R. D. Everett.** 1988. Mutational dissection of the HSV-1 immediate-early protein Vmw175 involved in transcriptional transactivation and repression. Virology **166:**186–196.
52. **Pereira, L., D. V. Dondero, D. Gallo, V. Devlin, and J. D. Woodie.** 1982. Serologic analysis of herpes simplex virus types 1 and 2 with monoclonal antibodies. Infect. Immun. **35:**363–367.
53. **Reid, K. B. M., D. R. Bentley, R. D. Campbell, L. P. Chung, R. B. Sim, T. Kristensen, and B. F. Tack.** 1986. Complement system proteins which interact with C3b or C4b. Immunol. Today **7:**230–234.
54. **Richman, D. D., A. Buckmaster, S. Bell, C. Hodgman, and A. C. Minson.** 1986. Identification of a new glycoprotein of herpes simplex virus type 1 and genetic mapping of the gene that codes for it. J. Virol. **57:**647–655.
55. **Robbins, A. K., R. J. Watson, M. E. Whealy, W. W. Hays, and L. W. Enquist.** 1986. Characterization of a pseudorabies virus glycoprotein gene with homology to herpes simplex virus type 1 and type 2 glycoprotein C. J. Virol. **58:**339–347.
56. **Sanger, F., S. Nicklen, and A. R. Coulson.** 1977. DNA sequencing with chain-terminating inhibitors. Proc. Natl. Acad. Sci. USA **74:**5463–5467.
57. **Seidel-Dugan, C., M. Ponce de Leon, H. M. Friedman, L. F. Fries, M. M. Frank, G. H. Cohen, and R. J. Eisenberg.** 1988. C3b receptor activity on transfected cells expressing glycoprotein C of herpes simplex virus types 1 and 2. J. Virol. **62:** 4027–4036.
58. **Smiley, M. L., J. A. Hoxie, and H. M. Friedman.** 1985. Herpes simplex virus type 1 infection of endothelial, epithelial, and fibroblast cells induces a receptor for C3b. J. Immunol. **134:** 2673–2678.
59. **Spear, P. G.** 1984. Glycoproteins specified by herpes simplex virus, p. 315–356. *In* B. Roizman (ed.), The herpesviruses, vol. 3. Plenum Publishing Corp., New York.
60. **Spear, P. G.** 1985. Antigenic structure of herpes simplex viruses, p. 425–446. *In* M. H. van Regenmortel and A. R. Neurath (ed.), Immunochemistry of viruses; the basis for serodiagnosis and vaccines. Elsevier Science Publishers, Amsterdam.
61. **Swain, M. A., R. W. Peet, and D. A. Galloway.** 1985. Characterization of the gene encoding herpes simplex virus type 2 glycoprotein C and comparison with the type 1 counterpart. J. Virol. **53:**561–569.
62. **Tan, T.-H., J. Wallis, and A. J. Levine.** 1986. Identification of the p53 protein domain involved in formation of the simian virus 40 large T-antigen-p53 protein complex. J. Virol. **59:**574–583.
63. **Wilcox, W. C., D. Long, D. L. Sodora, R. J. Eisenberg, and G. H. Cohen.** 1988. The contribution of cysteine residues to antigenicity and processing of herpes simplex virus type 1 glycoprotein D. J. Virol. **62:**1941–1947.
64. **Zezulak, K. M., and P. G. Spear.** 1983. Characterization of a herpes simplex virus type 2 75,000-molecular-weight glycoprotein antigenically related to herpes simplex virus type 1 glycoprotein C. J. Virol. **47:**553–562.
65. **Zezulak, K. M., and P. G. Spear.** 1984. Mapping of the structural gene for the herpes simplex type 2 counterpart of herpes simplex virus type 1 glycoprotein C and identification of a type 2 mutant which does not express this glycoprotein. J. Virol. **49:**741–747.
66. **Zweig, M., S. D. Showalter, S. V. Bladen, C. J. Heilman, Jr., and B. Hampar.** 1983. Herpes simplex virus type 2 glycoprotein gF and type 1 glycoprotein C have related antigenic determinants. J. Virol. **47:**185–192.
67. **Zweig, M., S. D. Showalter, D. J. Sims, and B. Hampar.** 1984. Antibodies to a synthetic oligopeptide that react with herpes simplex virus type 1 and 2 glycoprotein C. J. Virol. **51:**430–436.

Downloaded from http://jvi.asm.org/ on June 3, 2014 by guest